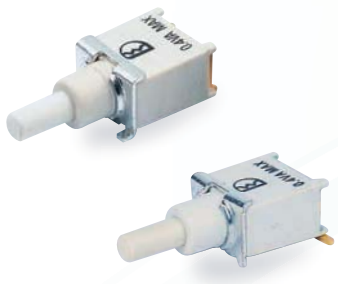

SPECIFICATIONS

CONTACT RATING: Dependent upon contact material.
MECHANICAL LIFE: 50,000 make-and-break cycles.
CONTACT RESISTANCE: 20 mΩ max. initial @ 2-4VDC
100mA for both silver and gold plated contacts.
INSULATION RESISTANCE: 1,000 MΩ min.
DIELECTRIC STRENGTH: 1,000 Vrms min.@sea level.
OPERATING TEMPERATURE: -30°C to 85°C.

MATERIALS

CASE & BUSHING: Glass filled nylon 6/6,flame retardant,
heat srabilized (UL94v-0).
PLUNGER: Thermoplastic Polyester (UL 94V-0),
with intenal O-ring seal.
SWITCH SUPPORT: Brass,tin plated.
CONTACT / TERMINALS: Silver or gold plated copper alloy.

IP 67
ACCORDING TO
EN 60529:1991+A1:2001
IEC 60529:2001

c US
E 187490

RoHS compliant

lead-free

HOW TO ORDER

MODEL NO.	TERMINATIONS	CONTACT MATERIAL	SEAL	RoHS SOLDERING
			E	

Model NO.
8BS8 On-Mom.
8BS9 Off-Mom.

Terminations
MT (STD) Right angle, surface mount.
MZ (STD)

Contact material
Q Silver
R Gold
C Gold over silver

Seal
E EPOXY (std)

RoHS soldering
☐ Rohs Compliant
S Rohs & Lead Free
F Halogen Free+RoHS

SWITCH FUNCTION

NO. POLES	UL/CSA MODEL NO.	MODEL NO.	SWITCH FUNCTION		CONNECTED TERMINALS / SCHEMATIC	
			POS.1	POS.2	POS.1	POS.2
SP	Q28B18	8BS8	ON	MOM	2-1 (2 (COMM), NC 1, 3 NO)	2-3 (2 (COMM), NC 1, 3 NO)
	Q28B19	8BS9	OFF	MOM	OPEN	1-3 (1, 3)

MOM=MOMENTARY

POLE OPTIONS

MT

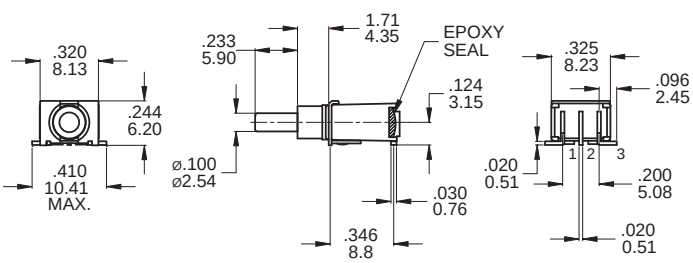

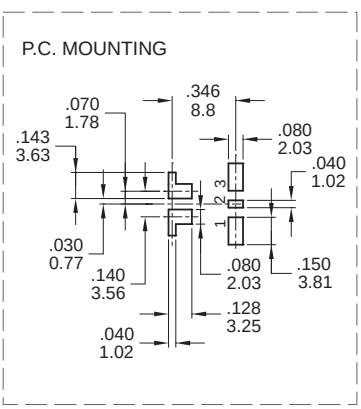

SPDT

Part No. Shown : 8BS8MTRE

MZ

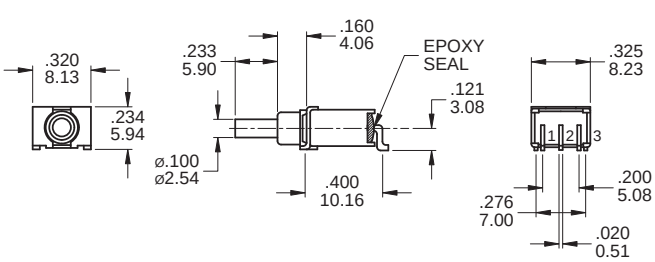

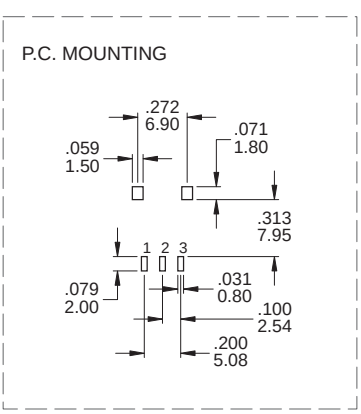

SPDT

Part No. Shown : 8BS8MZRE

MT

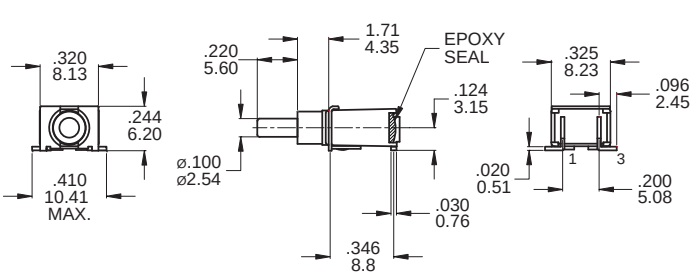

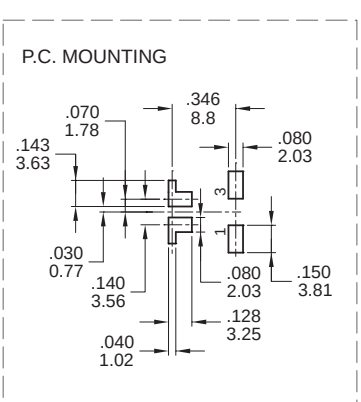

SPST

Part No. Shown : 8BS9MTRE

MZ

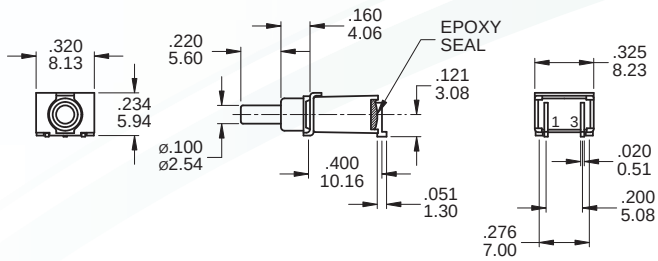

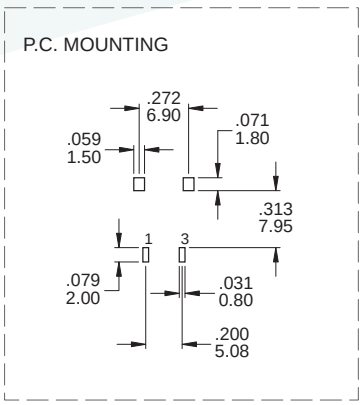

SPST

Part No. Shown : 8BS9MZRE

PACKAGING

Switches available on embossed antistatic tape and reels.
Tape and cover strip are conductive for use near statically sensitive components.

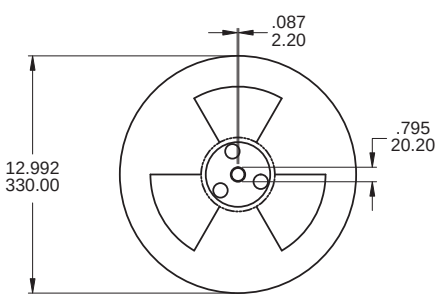

SCALE: 10 : 1

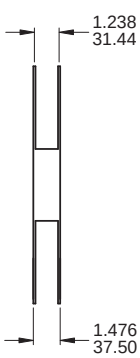

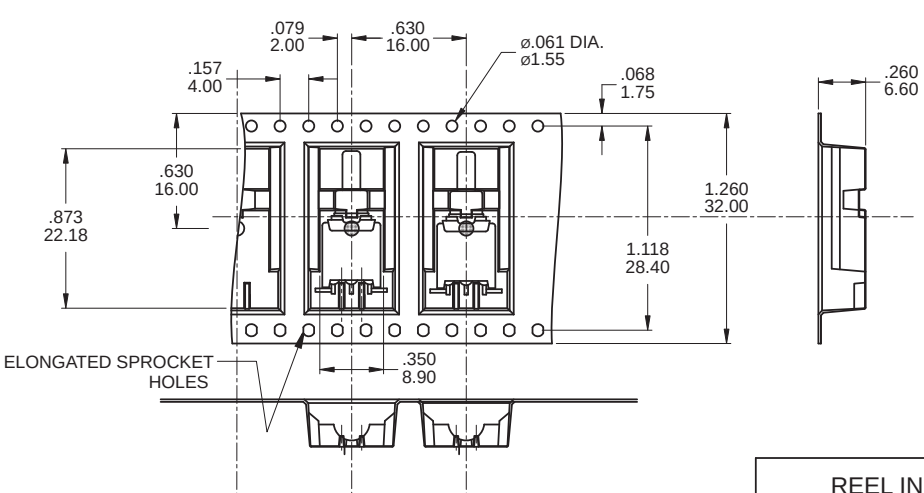

SCALE: 1 : 1

REEL INFORMATION	
QUANTITY PER REEL	500 / pcs

CONTACT MATERIAL OPTIONS

	CONTACT PLATING	TERMINAL PLATING	RATINGS
Q	Silver	Q = Gold flash over silver	3 Amps with resistant load @ 120VAC or 28VDC 1 Amps with resistant load @ 250VAC
C	Gold over Silver	C = Gold over silver	
R	Gold	R = Gold	0.4 Volt - Amps (VA) max. @ 20V max. (AC or DC)

SOLDERING PROCESSES

MANUAL SOLDERING: Use soldering iron of 30 watts, controlled at 350°C approximately 5 seconds while applying solder.

WAVE SOLDERING: Recommended Soldering Temperature: 260 ± 5°C
Duration of Solder Immersion: Max 5 sec. (PCB is 1.6mm in thickness)

SOLDERING: Vapor phase & IR-reflow soldering can be applied.

Temperature Profile
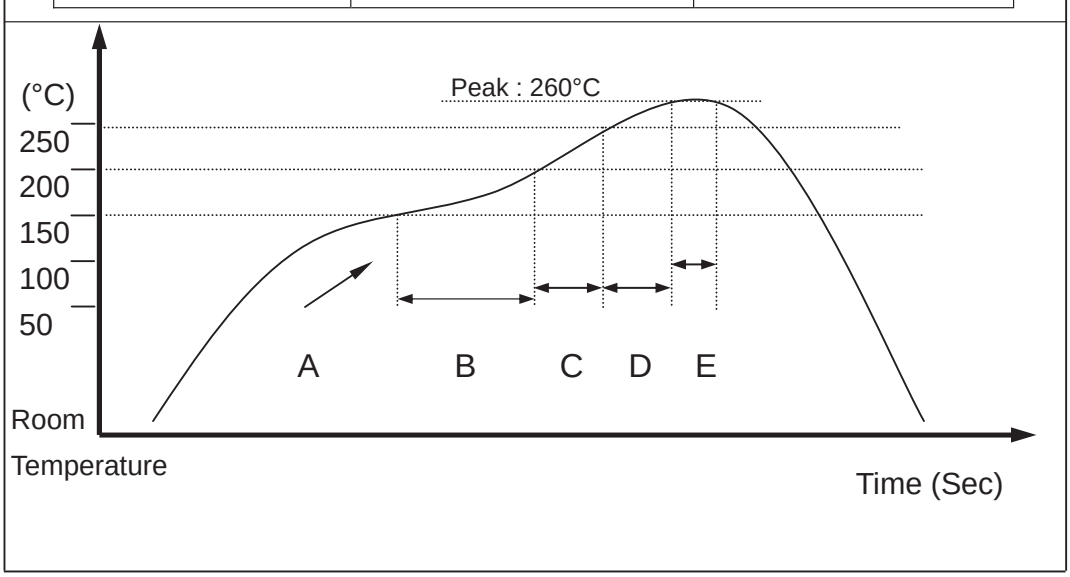
Zone	Room Temperature	Time (Sec)
Pre-heat (A)	150°C	Min 120s
Soak (B)	180°C ~ 200°C	Min 150s
Peak (C)	200°C ~ 235°C	Min 30s
Peak (D)	235°C ~ 260°C	Min 40s
Peak (E)	260°C	Max 5s