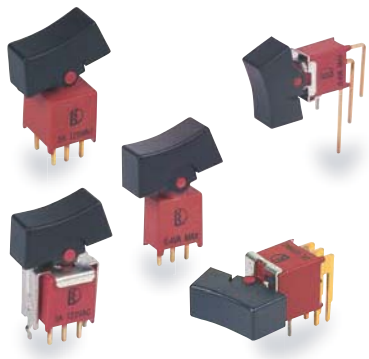

IP 67 ACCORDING TO EN 60529:1991+A1:2001 IEC 60529:2001 · c UL us E 187490 · RoHS compliant · Pb lead-free

SPECIFICATIONS

CONTACT RATING: Dependent upon contact material.
MECHANICAL LIFE: 30,000 make-and-break cycles.
CONTACT RESISTANCE: 20mΩmax. initial @ 2-4VDC 100mA for both silver and gold plated contacts.
INSULATION RESISTANCE: 1,000 MΩ min.
DIELECTRIC STRENGTH: 1,000 Vrms min.@sea level.
OPERATING TEMPERATURE: -30°C to 85°C.

MATERIALS

CASE & BUSHING : Glass filled nylon 6/6,flame retardant, heat stabilized (UL94V-0).
ACTUATOR: Nylon,black std.Internal O-ring seal standard with all actuactors.
SWITCH SUPPORT: Brass or steel,tin plated.
TERMINAL/CONTACT: Silver or gold plated copper alloy.

HOW TO ORDER

MODEL NO. | ACTUATOR | ACTUATOR COLOR | CAP MARKING | TERMINATIONS | TERMINAL MATERIAL | SEAL | RoHS SOLDERING

□□□□ — □□□ — □ — □ — □□□ — □ — E — □

Model NO.
- 4AS1 SP On-None-On
- 4AS2 SP On-None-Mom.
- 4AS3 SP On-Off-On
- 4AS4 SP Mom.-Off-Mom.
- 4AS5 SP On-Off-Mom.
- 4AS6 SP Off-None-On
- 4AD1 DP On-None-On
- 4AD2 DP On-None-Mom.
- 4AD3 DP On-Off -On
- 4AD6 DP On-On-On

Actuator
- R1 (STD) Rocker, 7.62 wide
- R2 (STD) Rocker, 5.84 wide
- R4 Rocker 5.80 wide

Cap marking

1	O —
2	O I
5	← →
6	I O II
7	•
8	G I
9	ON/OFF
J	G —

Actuator color

ITEM NO	COLOR
1	White
2	Black (Std)
3	Red
4	Orange
5	Yellow
6	Green
7	Blue
8	Brown
9	Gray

Terminations
- M1 Solder Lug
- M2 PC thru-hole
- M5 wire wrap
- M6 Right angle, PC thru-hole
- M6N Right angle, snap-in, PC thru-hole
- M7 Vertical right angle, PC thru-hole
- M7N Vertical right angle, snap-in, PC thru-hole
- VS2 8.94 high, V-bracket
- V2N 8.94 high, snap-in V-bracket

Terminal material
- Q Gold flash over silver
- R Gold
- G Gold,pure-tin
- S Gold flash over silver,pure-tin
- C Gold over silver
- K Gold over silver,pure-tin

Seal
- E EPOXY (std)

RoHS soldering
- □ Rohs Compliant
- S Rohs & Lead Free
- F Halogen Free+RoHS

SWITCH FUNCTION

NO. POLES	UL/CSA MODEL NO.	MODEL NO.	SWITCH FUNCTION			CONNECTED TERMINALS / SCHEMATIC		
			POS.1	POS.2	POS.3	POS.1	POS.2	POS.3
SP	Q24A11	4AS1	ON	NONE	ON	2-3	N/A	2-1
	Q24A12	4AS2	ON	NONE	MOM			
	Q24A13	4AS3	ON	OFF	ON	2 (COMM) 1 3	OPEN	2 (COMM) 1 3
	Q24A14	4AS4	MOM	OFF	MOM			
	Q24A15	4AS5	ON	OFF	MOM			
	Q24A16	4AS6	OFF	NONE	ON	OPEN	N/A	3-1
DP	Q24A21	4AD1	ON	NONE	ON	2-3,5-6	N/A	2-1,5-4
	Q24A22	4AD2	ON	NONE	MOM	2 (COMM) 5 1 3 4 6		2(COMM) 5 1 3 4 6
	Q24A23	4AD3	ON	OFF	ON		OPEN	
▲	Q24A26	4AD6	ON	ON	ON	2-3,5-6	2-3,5-4	2-1,5-4

MOM=MOMENTARY

▲ Please check the availability in advance before order

POLE OPTIONS

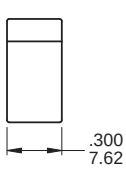

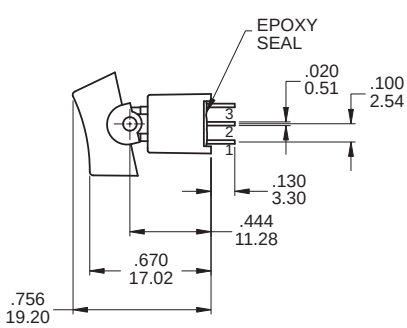

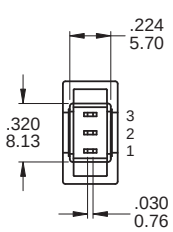

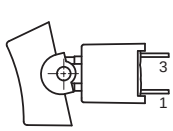

SPDT

Part No. Shown : 4AS1R102M2RE

4AS6 Models : Omit 2nd terminal

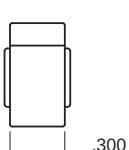

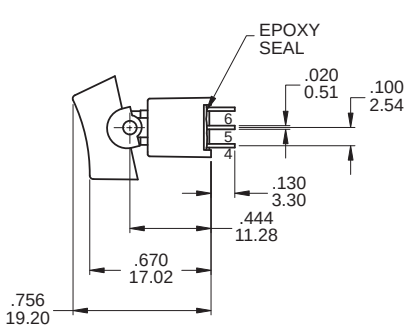

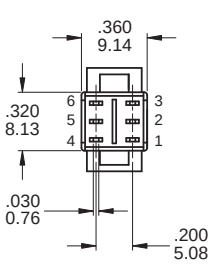

DPDT

Part No. Shown : 4AD1R102M2QE

ACTUATOR OPTIONS - PANEL MOUNT

R1

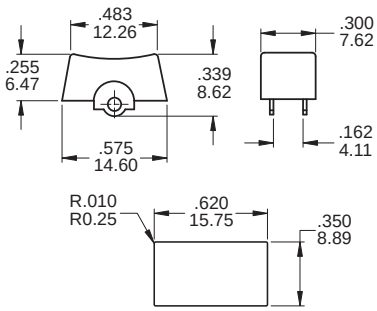

PANEL MOUNTING - R1

R2

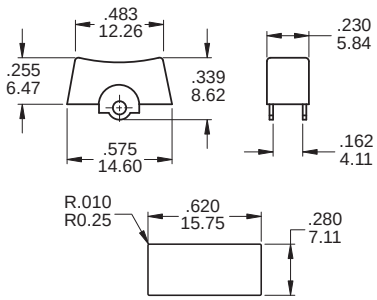

PANEL MOUNTING - R2

R4

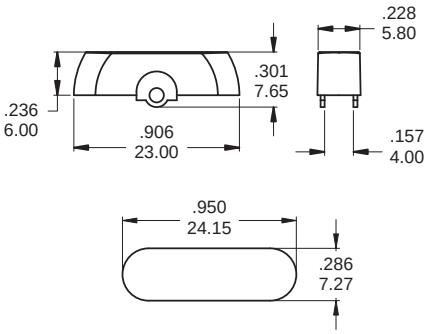

PANEL MOUNTING - R4

TERMINATION OPTIONS

M2 PC Thru-hole

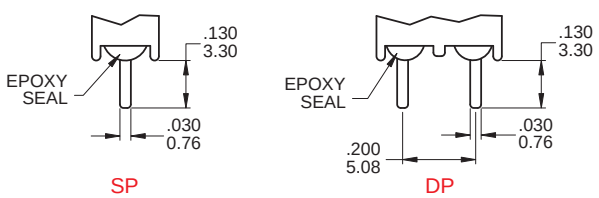

M5 Wire Wrap

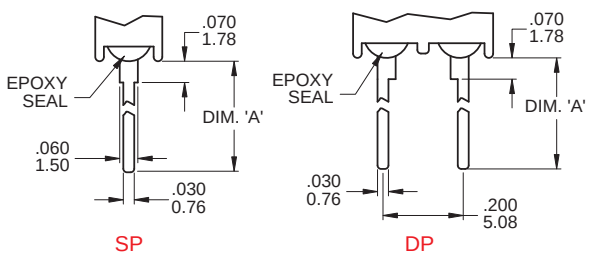

OPTION CODE	DIM. 'A'
M5-1	.614 (15.60)
M5-2	.236 (6.00)

OTHER TERMINATION OPTIONS

M6	RIGHT ANGLE P.C. MOUNT
M7	RIGHT ANGLE P.C. MOUNT
VS2	VERTICAL BRACKET P.C. MOUNT
VS3	VERTICAL BRACKET P.C. MOUNT

M6

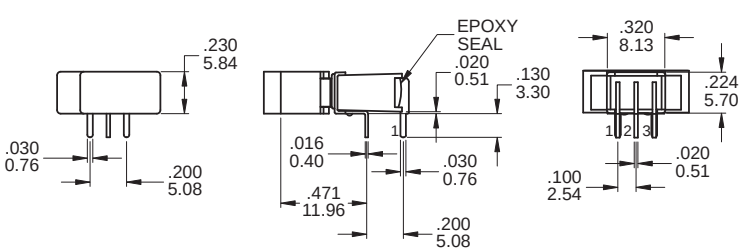

P.C. MOUNTING

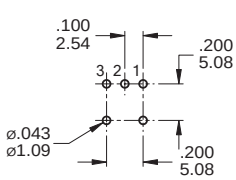

SPDT

Part No. Shown : 4AS1R202M6QE

M6

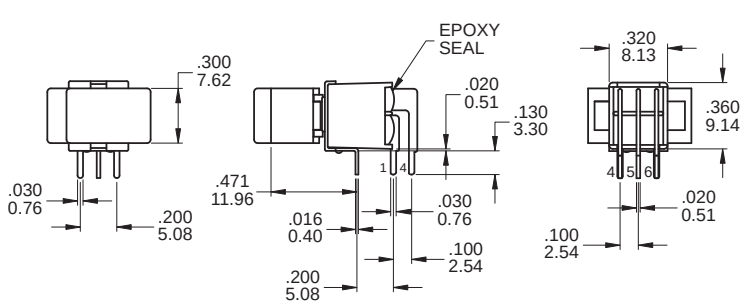

P.C. MOUNTING

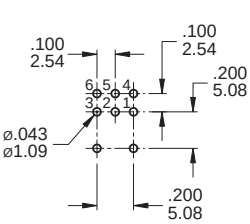

DPDT

Part No. Shown : 4AD1R102M6QE

M7

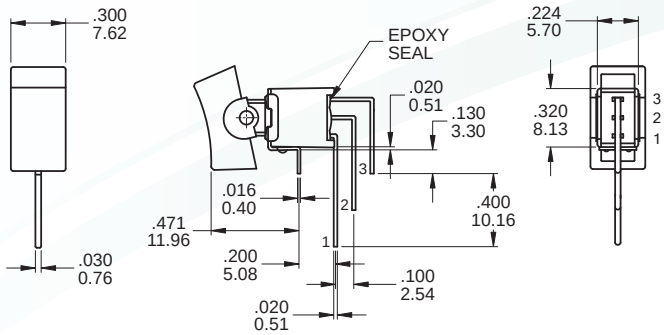

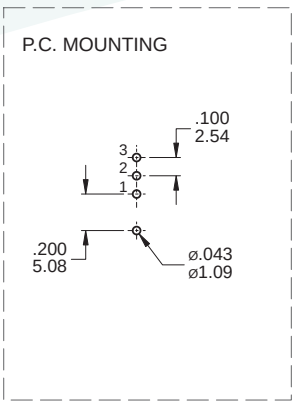

SPDT

Part No. Shown : 4AS1R102M7RE

M7

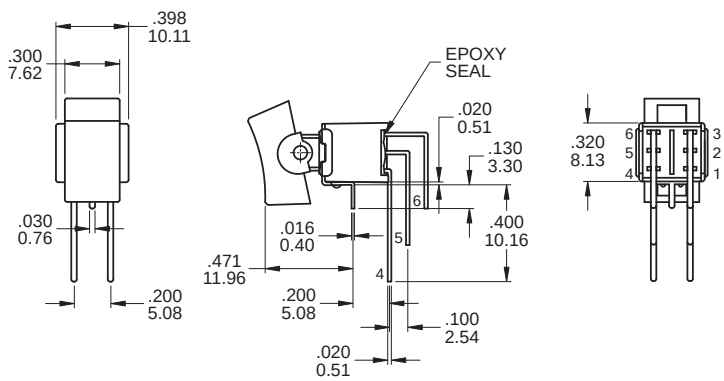

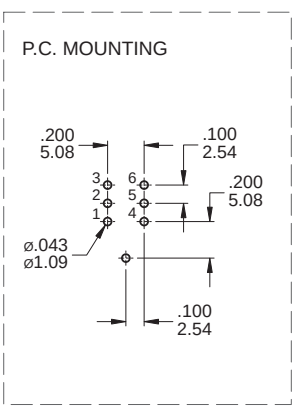

DPDT

Part No. Shown : 4AD1R102M7RE

VS2

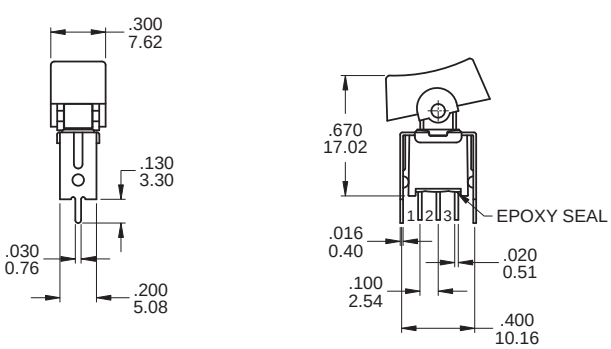

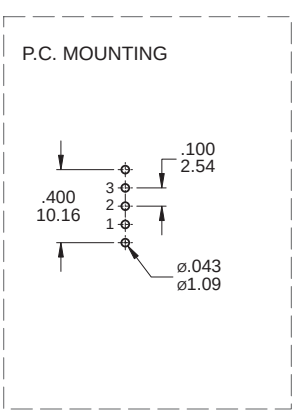

SPDT

Part No. Shown : 4AS1R102VS2RE

VS2

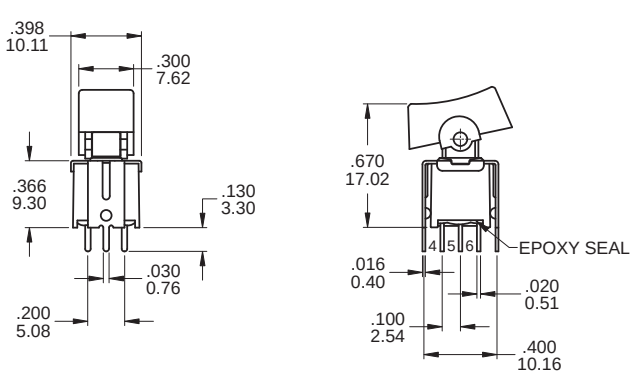

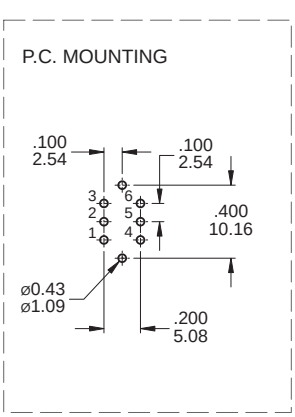

DPDT

Part No. Shown : 4AD1R102VS2QE

SNAP-IN TERMINATION OPTIONS

M6N

M7N

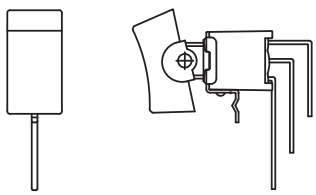

V2N

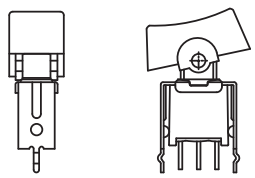

CONTACT MATERIAL OPTIONS

	CONTACT PLATING	TERMINAL PLATING	RATINGS
Q	Silver	Q = Gold flash over silver	3 Amps with resistant load @ 120VAC or 28VDC 1 Amps with resistant load @ 250VAC
S		S = Gold flash over silver,pure - tin	
C	Gold over Silver	C = Gold over silver	
K		K = Gold over silver,pure - tin	
R	Gold	R = Gold	0.4 Volt - Amps (VA) max. @ 20V max. (AC or DC)
G		G = Gold,pure - tin	

SOLDERING PROCESSES

MANUAL SOLDERING: Use soldering iron of 30 watts, controlled at 350°C approximately 5 seconds while applying solder.

WAVE SOLDERING: Recommended Soldering Temperature: 260 ± 5°C
Duration of Solder Immersion: Max 5 sec. (PCB is 1.6mm in thickness)