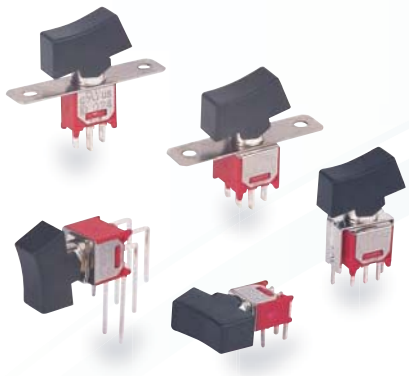

SPECIFICATIONS

CONTACT RATING: Dependent upon contact material.
MECHANICAL LIFE: 30,000 make-and-break cycles.
CONTACT RESISTANCE: 20 mΩ max. initial @ 2-4VDC
100mA for both silver and gold plated contacts.
INSULATION RESISTANCE: 1,000 MΩ min.
DIELECTRIC STRENGTH: 1,000 Vrms min.@sea level.
OPERATING TEMPERATURE: -30°C to 85°C.

MATERIALS

CASE: Diallyl phthalate (DAP) (UL94v-0).
ACTUATOR: Nylon,black std.
BUSHING: Brass or Zinc,nickel plated.
HOUSING: Stainless Steel.
SWITCH SUPPORT: Brass,tin plated.
TERMINAL/CONTACT: Brass,with silver or gold.

c US E 187490 RoHS compliant lead-free

HOW TO ORDER

MODEL NO. | ACTUATOR | ACTUATOR COLOR | CAP MARKING | TERMINATIONS | CONTACT MATERIAL | SEAL | RoHS SOLDERING

Model NO.
4MS1 SP On-None-On
4MS2 SP On-None-Mom.
4MS3 SP On-Off-On
4MS4 SP Mom.-Off-Mom.
4MS5 SP On-Off-Mom.
4MS6 SP Off-None-On
4MD1 DP On-None-On
4MD2 DP On-None-Mom.
4MD3 DP On-Off -On

Actuator
R1 (STD) Rocker, 7.62 wide , 14.73 length
R2 (STD) Rocker, 5.84 wide , 14.73 length
R3 5.84 wide , 10.23 length

Cap marking

1	O —
2	O I
5	← →
6	I O II
7	•
8	G I
9	ON/OFF
J	G —

Contact material
Q Silver
R Gold
G Gold,pure-tin
S Silver,pure-tin
C Gold over silver
K Gold over silver,pure-tin

Seal
E EPOXY (std)
N NO EPOXY

RoHS soldering
☐ Rohs Compliant
S Rohs & Lead Free
F Halogen Free+RoHS

Actuator color

ITEM NO	COLOR
01	White
02	Black (Std)
03	Red
04	Orange
05	Yellow
06	Green
07	Blue
08	Brown
09	Gray

Terminations
M1 Solder Lug
M2 PC thru-hole
M5 wire wrap
M6 Right angle, PC thru-hole
M6N Right angle, snap-in, PC thru-hole
M7 Vertical right angle, PC thru-hole
M7N Vertical right angle, snap-in, PC thru-hole
VS2 8.94 high, V-bracket
V2N 8.94 high, snap-in V-bracket
VS3 8.94 high, V-bracket
V3N 8.94 high, snap-in V-bracket

SWITCH FUNCTION

NO. POLES	UL/CSA MODEL NO.	MODEL NO.	SWITCH FUNCTION			CONNECTED TERMINALS / SCHEMATIC		
			POS.1	POS.2	POS.3	POS.1	POS.2	POS.3
SP	Q2411	4MS1	ON	NONE	ON	2-3 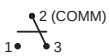	N/A	2-1 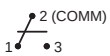
	Q2412	4MS2	ON	NONE	MOM			
	Q2413	4MS3	ON	OFF	ON		OPEN	
	Q2414	4MS4	MOM	OFF	MOM			
	Q2415	4MS5	ON	OFF	MOM			
	Q2416	4MS6	OFF	NONE	ON	OPEN	N/A	3-1
DP	Q2421	4MD1	ON	NONE	ON	2-3,5-6	N/A	2-1,5-4
	Q2422	4MD2	ON	NONE	MOM			
	Q2423	4MD3	ON	OFF	ON		OPEN	

MOM=MOMENTARY

POLE OPTIONS

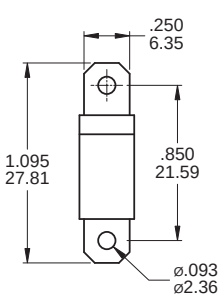

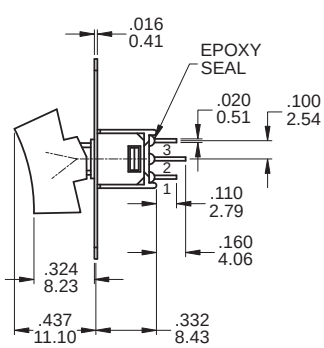

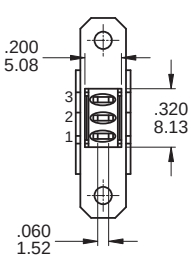

SPDT

Part No. Shown : 4MS1R102M1QE

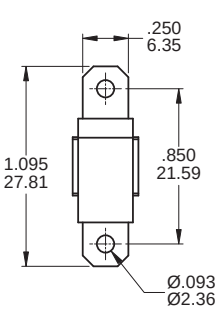

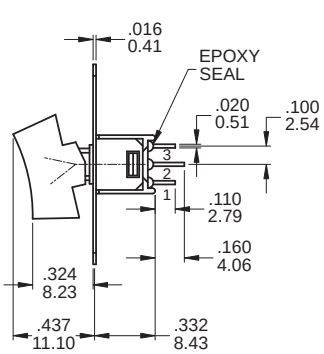

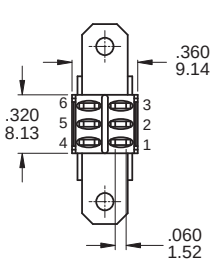

DPDT

Part No. Shown : 4MD1R102M1QE

ACTUATOR OPTIONS - PANEL MOUNT

R1

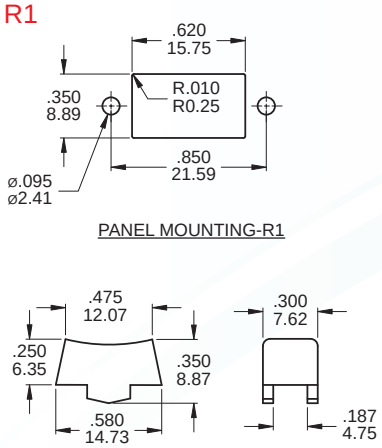

R2

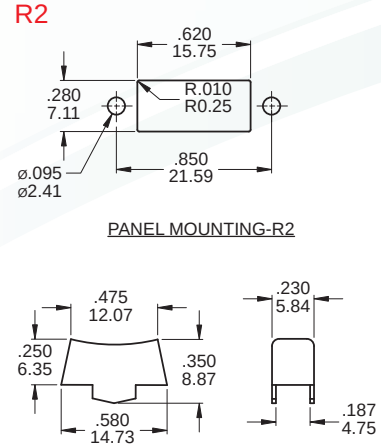

R3

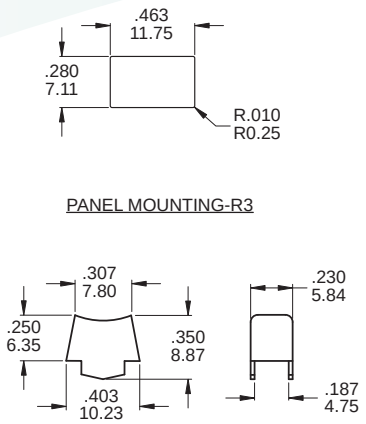

TERMINATION OPTIONS

M1 Solder lug

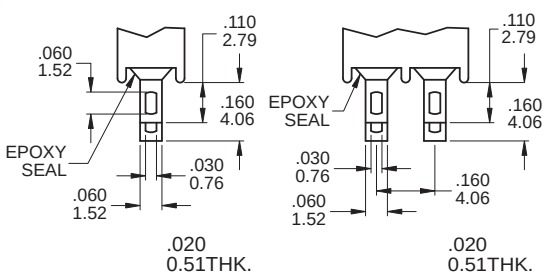

Double Pole

M2 PC Thru-hole

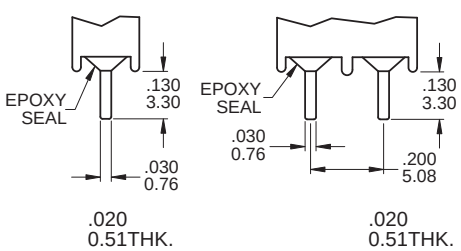

Double Pole

M5 Wire Wrap

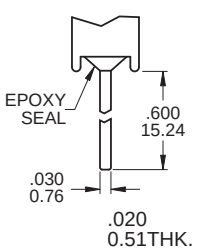

M6

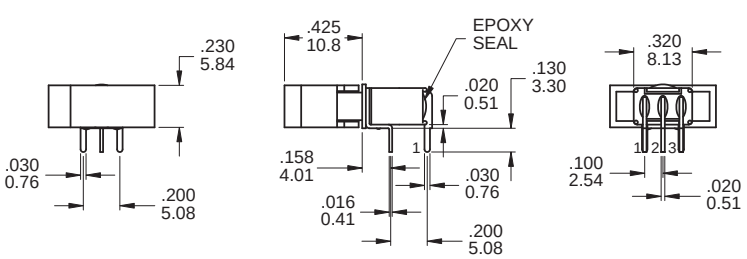

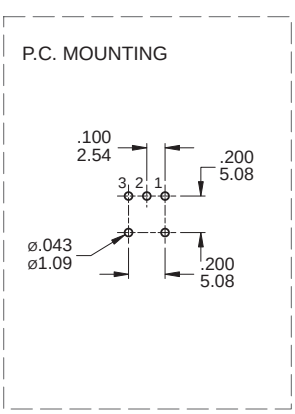

SPDT

Part No. Shown : 4MS1R202M6QE

M6

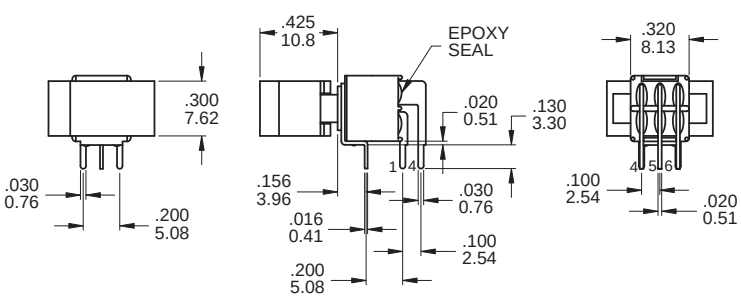

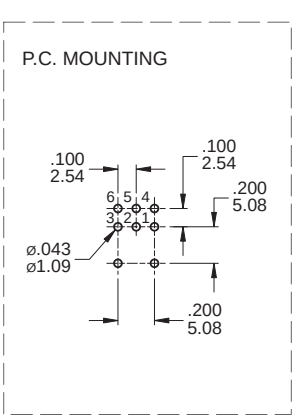

DPDT

Part No. Shown : 4MD1R102M6QE

M7

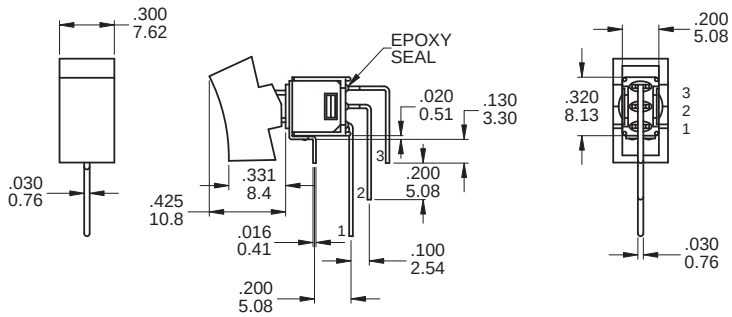

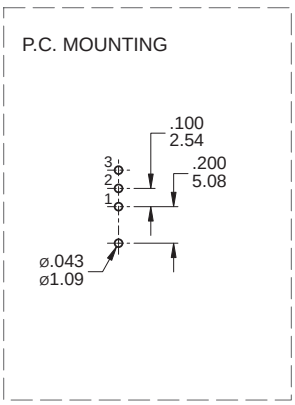

SPDT

Part No. Shown : 4MS1R102M7QE

M7

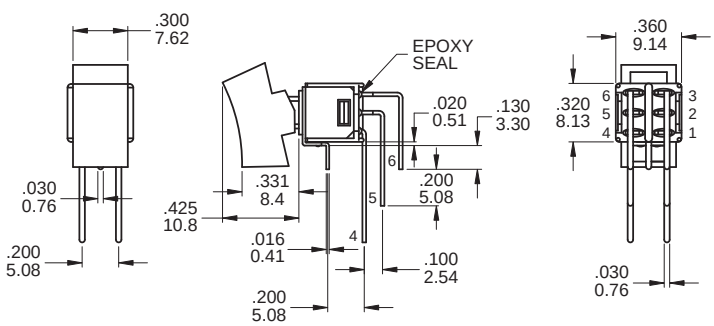

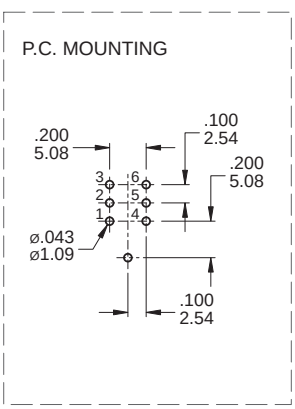

DPDT

Part No. Shown : 4MD1R102M7QE

VS2 - VS3

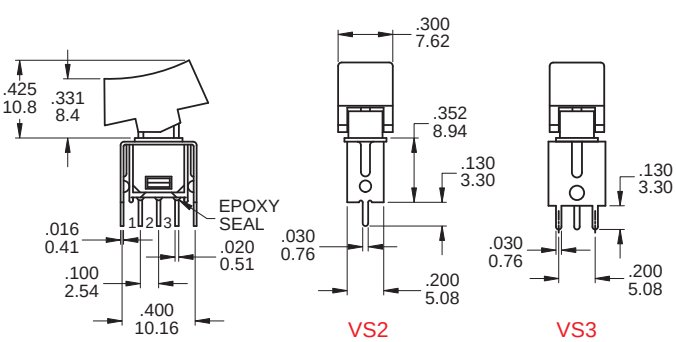

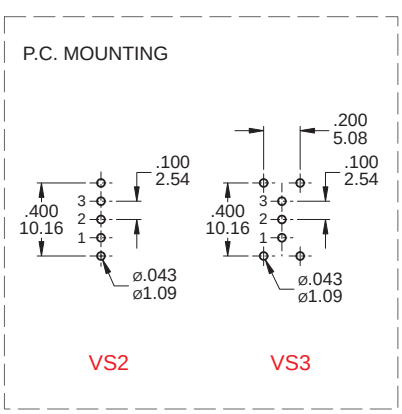

SPDT

Part No. Shown : 4MS1R102VS2QE

VS2 - VS3

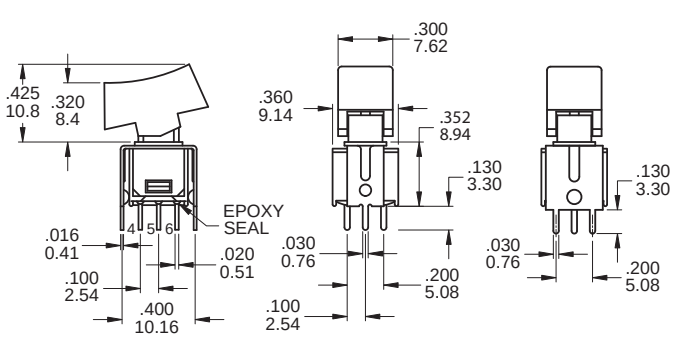

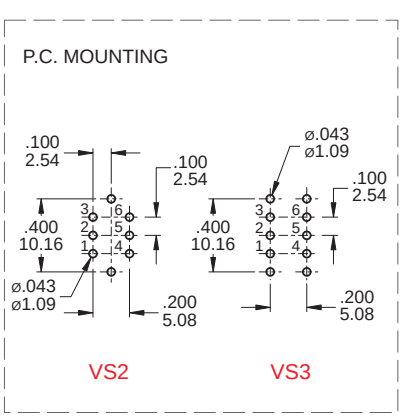

DPDT

Part No. Shown : 4MD1R102VS2QE

SNAP-IN TERMINATION OPTIONS

M6N

M7N

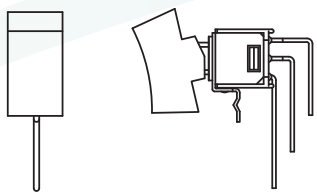

V2N

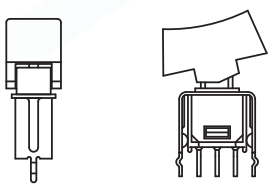

V3N

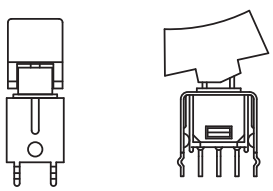

CONTACT MATERIAL OPTIONS

	CONTACT PLATING	TERMINAL PLATING	RATINGS
Q	Silver	Q = Silver	3 Amps with resistant load @ 120VAC or 28VDC 1 Amps with resistant load @ 250VAC
S		S = Silver,pure - tin	
C	Gold over Silver	C = Gold over silver	
K		K = Gold over silver,pure - tin	
R	Gold	R = Gold	0.4 Volt - Amps (VA) max. @ 20V max. (AC or DC)
G		G = Gold,pure - tin	

SOLDERING PROCESSES

MANUAL SOLDERING: Use soldering iron of 30 watts, controlled at 350°C
approximately 5 seconds while applying solder.

WAVE SOLDERING: Recommended Soldering Temperature: 260 ± 5°C
Duration of Solder Immersion: Max 5 sec. (PCB is 1.6mm in thickness)